TM600F
Coin Acceptor
Technical Manual

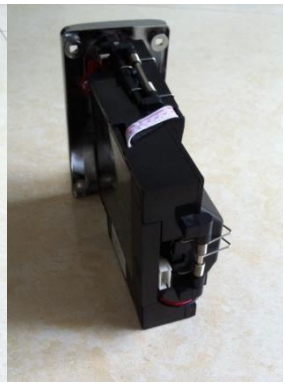

Index

1. Alter Log **4**
2. Introduction **4**
2.1 Main Features: 4
2.2 Specification: 4
3. Product Structure and Size **5**
4. Serial Output Mode **7**
4.1 Ports Instruction 7
4.2 Forbid Accepting Coins 7
4.2.1 Forbidden Mode 1 -- Low Level forbid accepting coins 7
4.2.2 Forbidden Mode 2 — High Level forbid accepting coins 8
4.3 Serial Signal Output 8
4.4 Counter Output 9
5. Parallel Output Mode **10**
5.1 Ports Instruction 10
5.2 Forbid Accepting coins 10
5.2.1 Forbidden Mode 1 — Low Level forbid accepting coins 10
5.2.2 Forbidden Mode 2 — High Level forbid accepting coins 11
5.3 Coin Receiving Signal Output 11
6. Dip Switch Functions Setting **12**
6.1 Serial Port Output Level 12
6.1.1 Mode 1—N.O. 12
6.1.2 Mode 2—N.C. 12
6.2 Coin Identification Security 12
6.3 Serial Output Signal Format 12
6.3.1 Pulse Signal 12
6.3.2 RS232 Signal 13
6.4 Inhibiting Port Output Level 14
6.4.1 Forbidden Mode 1--Low Level forbid accepting coins 14
6.4.2 Forbidden Mode 2--High Level forbid accepting coins 15
7. Coin Parameters Setting **16**
7.1 Access To Coin Parameters Setting 16
7.2 Clean Up All Coin Parameters 16
7.3 Clean Up Group Coin Parameters 16
7.4 Reset All Coin Parameters 16
7.5 Add New Coin Parameters 16
7.6 Exit Coin Parameters Setting 17
8. Coin Acceptor Parameters Setting **18**
8.1 Acess To Coin Acceptor Parameters Setting 18
8.2 Recover Coin Acceptor Parameters To The Defaulted Value 18
8.3 Machine Charge Amount Setting A1 18
8.4 Serial Output Signal Pulse-width/ RS232 Transmit Baud Rate Setting A2 18
8.5 Faulty Alarm Option A3 19

8.6 Serial Port RS232 Signal Output Format A4 19
8.7 Serial Or Parallel Port Option A5 19
8.8 Exit The Setting 19
9. Common Faulties 20
9.1 Error Code(E1 - E7,EE) 20
9.2 Coins Are Refused And Returned 20
9.3 Send No Signal After Deposit Coins 21
9.4 Send Error Signals After Deposit Coins 21
9.5 Coins Are Not Easy To Be Identified, Coins Are Returned Frequently 21

1. Alter Log

Date/Author	Simple Introduction	Version
2010/06 TM/DG	Basic functions are completed。	1.0

2. Introduction

TM600F Series of coin acceptor is a electronic coin acceptor with high reliability, Which is widely used in amusement facilities, vending machines and so on.

2.1 Main Features:

- Enable to recognize 6 groups of coins in different denomination. (can exceed to 8 groups if need)
- Enable to forbid accepting all coins
- Industrial standard connector ---10Pin Parallel port
- Special connector ---5Pin Serial port
- Enable to release coins in jam
- Enable to self-diagnose

2.2 Specification:

- **Coin Size:**

  Diameter: 17 – 30.5mm
  Thickness: 1.25 – 3.2mm

- **Working Environment:**

  Working Temperature: 0°C to 50°C
  Storage Temperature: -30°C to55°C
  Ambient Humidity: Up to 95% RH non-condensing
  Working Voltage: Normal 12VDC
  Min 10VDC
  Max 15VDC
  Working Current: Standby 50mA
  Max 450mA （At the instant of collecting coin）
  Communication Interface: Standard parallel port -- 10Pin
  Special serial port -- 5Pin
  Installation Position: On any plane, the angle can't be more than 2 degrees between coin acceptor and vertical

3. Product Structure and Size

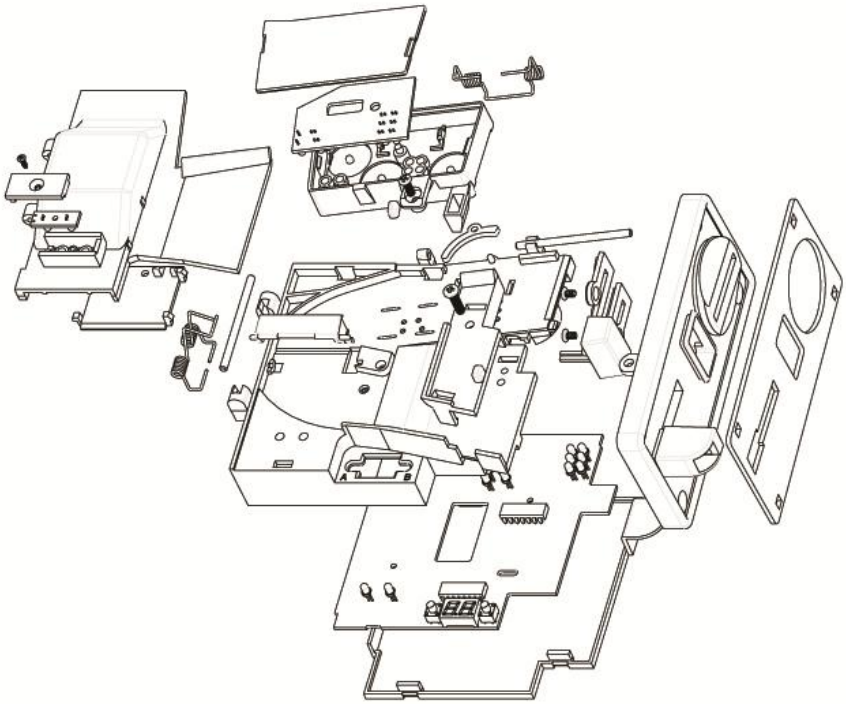

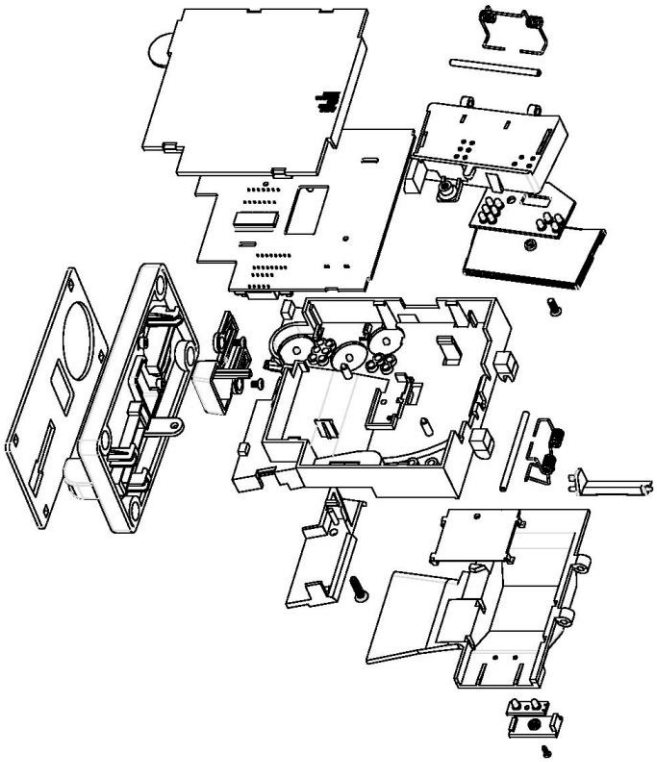

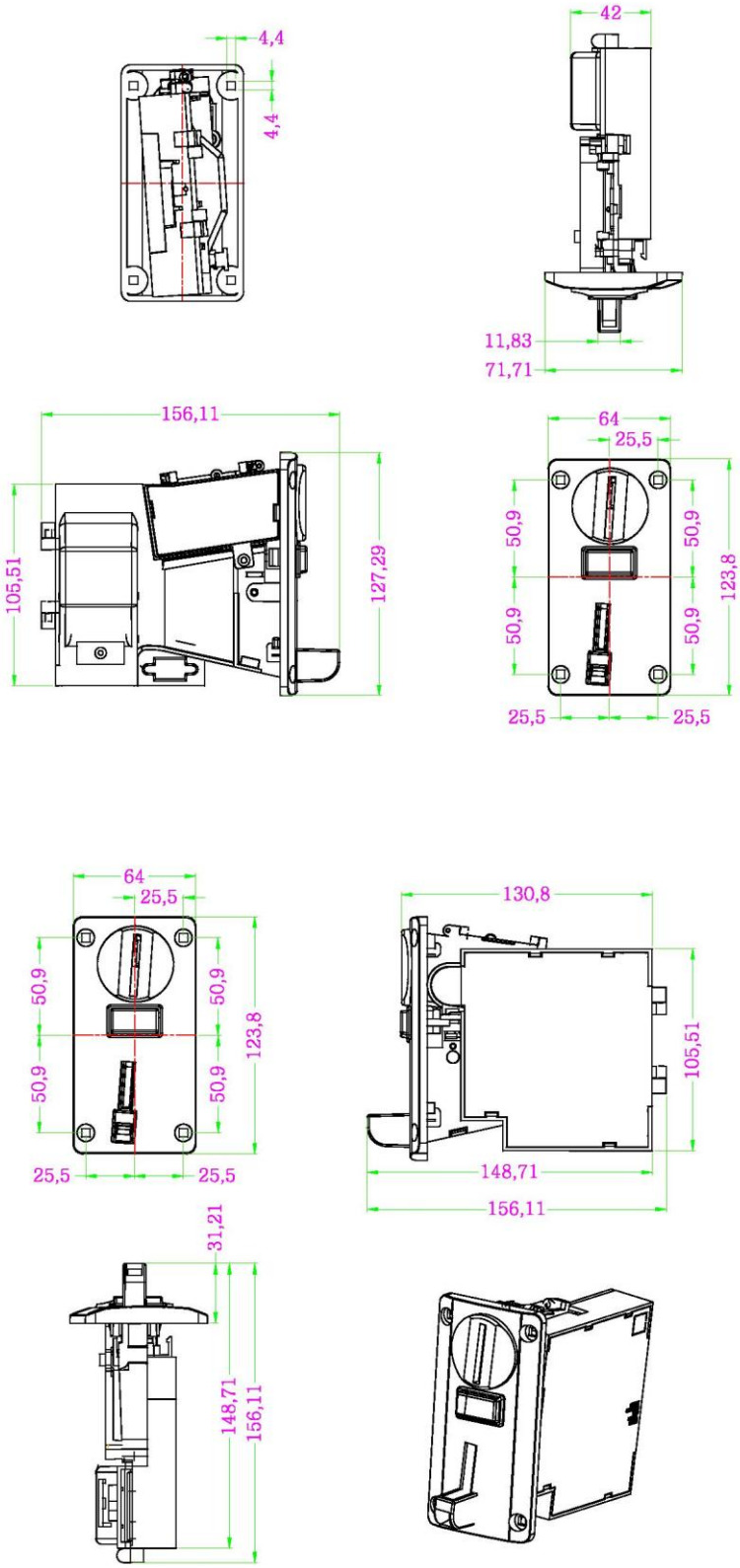
4,4
4,4
42
11,83
71,71
156,11
105,51
127,29
64
25,5
50,9
50,9
50,9
50,9
123,8
25,5
25,5
64
25,5
50,9
50,9
50,9
50,9
123,8
25,5
25,5
130,8
105,51
148,71
156,11
31,21
148,71
156,11

4. Serial Output Mode

4.1 Ports Instruction

Serial connector

Special connector：5Pin

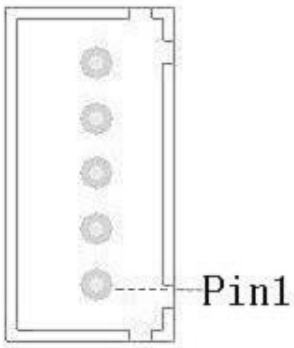

◎Serial Port

PIN	FUNCTION	ACTIVE
1	+12V	
2	Serial Signal Output	
3	0 V	
4	Counter Output	Low
5	Inhibiting port（**refer to item 4.2**）	

4.2 Forbid Accepting Coins

◎Inhibiting port connection

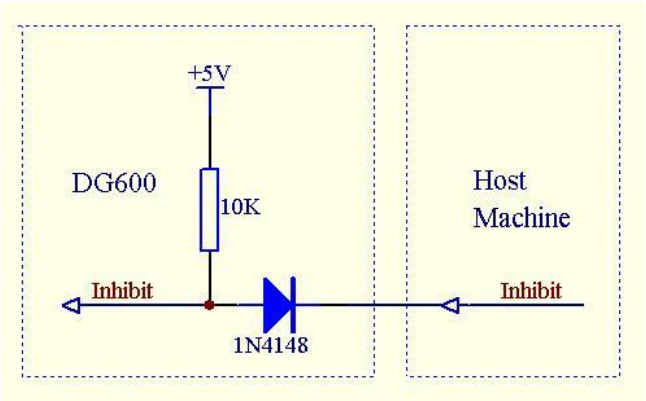

4.2.1 Forbidden Mode 1 -- Low Level forbid accepting coins

When SW4 is on “OFF” position，

If the 5th Inhibiting port is disconnected or connected to a high level（>+3V）, coin acceptor will accept all coins.

If the 5th Inhibiting port is connected to a low level(<+1V), coin acceptor will refuse all coins.

4.2.2 Forbidden Mode 2 — High Level forbid accepting coins

When SW4 is on "ON" position,

If the 5th Inhibiting port is disconnected or connected to a high level（>+3V）, coin acceptor will refuse all coins。

If the 5th Inhibiting port is disconnected or connected to a high level（<+1V）, coin acceptor will accept all coins。

4.3 Serial Signal Output

Serial signal output consists of a NPN transistor

◎ Signal output port

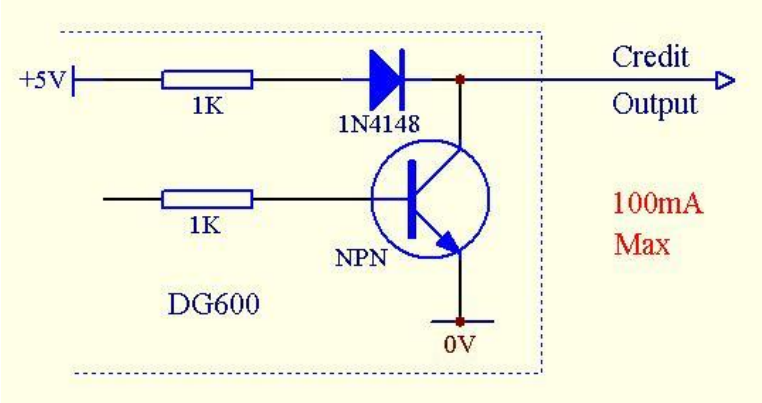

- In serial pulse signal output mode, on acceptance of enough coins (no less than machine charge amount), NPN transistor is turned on for a period of 25ms/45ms/65ms/100ms (+/-20%).

  Machine will detect not only the edges of credit pulses, but also credit pulses width is not less than 20ms in valid, as to eliminate noise or incorrect pulse in output line 。

Note: It can set the period of 25ms/45ms/65ms/100ms in coin acceptor parameter A2.

- In serial RS232 signal output mode, on acceptance of enough coins (no less than machine charge amount), NPN transistor is turned on by RS232 signal
- Output signal quantity= Deposited coin amount / Machine charge amount

E.G.:

Coin $0.1 is set as 01, coin $0.5 is 05, coin $1.00 is 10, machine charge amount is set as 02. It means that,

Deposit 2pcs of coins $0.1 to send out a signal

Deposit a coin of $0.5 to send out 2pcs of signals and remain a coin $0.1 amount

Deposit a coin of $1.00 to send out 5pcs of signals

4.4 Counter Output

◎Counter Output

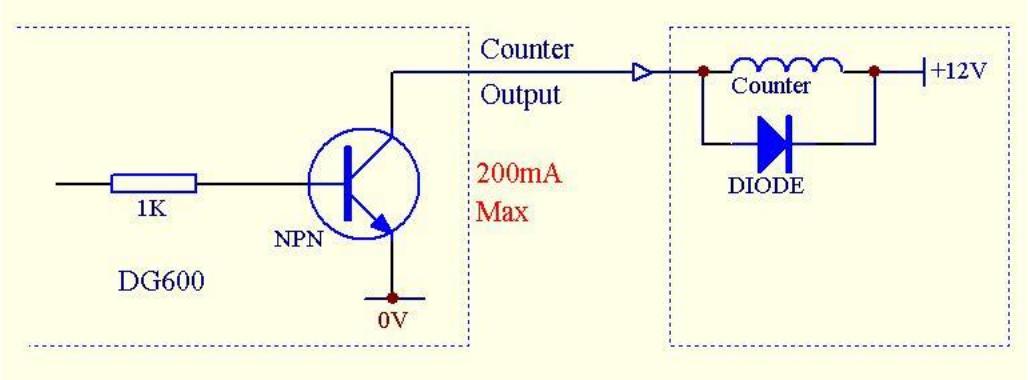

Counter output consists of a open-collector NPN transistor , on acceptance of enough coins (no less than machine charge amount), NPN transistor is turned on to short circuit for a period of 25ms/45ms/65ms/100ms (+/-20%).here output voltage should be less than 0.7V and max 200mA is available for electric current.

The pulse quantity Counter outputs is same to that signal outputs

5. Parallel Output Mode

5.1 Ports Instruction

Parallel connector

Industrial standard connector：10Pin DIL

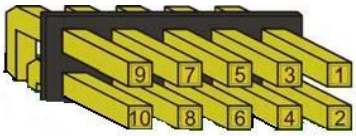

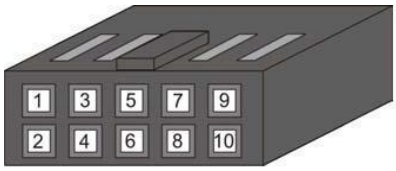

◎Parallel ports

PIN	FUNCTION	ACTIVE
1	0 V	
2	+12V	
3	Accept C5	Low
4	Accept C6	Low
5	None	
6	Inhibiting port（**refer to item 5.2**）	
7	Accept C1	Low
8	Accept C2	Low
9	Accept C3	Low
10	Accept C4	Low

5.2 Forbid Accepting coins

◎Inhibiting port connection

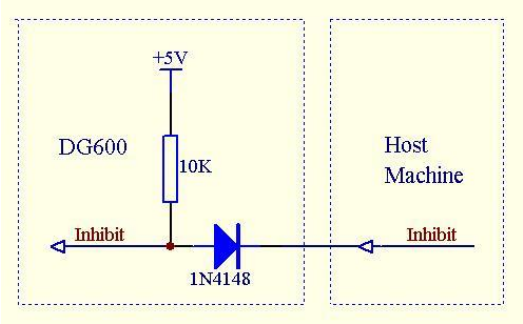

5.2.1 Forbidden Mode 1 — Low Level forbid accepting coins

When SW4 is on “OFF” position,

If the 6th Inhibiting port is disconnected or connected to a high level（>+3V）, coin acceptor will accept all coins.

If the 6th Inhibiting port is connected to a low level(<+1V), coin acceptor will refuse all coins.

5.2.2 Forbidden Mode 2 — High Level forbid accepting coins

When SW4 is on "ON" position

If the 6th Inhibiting port is disconnected or connected to a high level（>+3V）, coin acceptor will refuse all coins.

If the 6th Inhibiting port is connected to a low level(<+1V), coin acceptor will refuse all coins.

5.3 Coin Receiving Signal Output

6 groups of coin receiving signal output consist of 6pcs open-collector NPN transistors , on acceptance of a valid coin, the related NPN transistor is turned on to short circuit for a period of 100ms (+/-20%).here output voltage should be less than 0.7V and max 100mA is available for electric current.

Machine will detect not only the edges of credit pulses, but also credit pulses width is not less than 50ms in valid, as to eliminate noise or incorrect pulse in output line

◎Coin receiving signal output

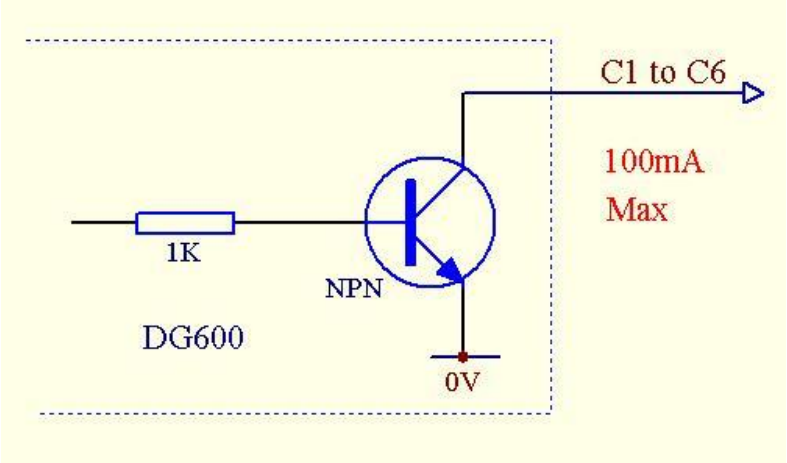

6. Dip Switch Functions Setting

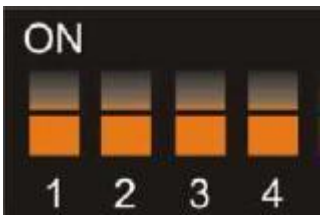

◎Dip Switch funcitons

	SW1 Port Level	SW2 Security	SW3 Transmitting	SW4 Inhibiting
ON	NC	Special	RS232	< +1V
OFF	NO	Normal	Pulse	> +3V

6.1 Serial Port Output Level

Note: The two mode options as blow are not suitable for parallel port output mode.

6.1.1 Mode 1—N.O.

When SW1 is on “OFF” position,
On standby, coin receiving output NPN transistor is open collector; on acceptance of enough coins (no less than machine charge amount), NPN transistor is turned on to short circuit for a period of 25ms/45ms/65ms/100ms (+/-20%).here output voltage should be less than 0.7V and max 100mA is available for electric current.
Note: it can set the period of 25ms/45ms/65ms/100ms in coin acceptor parameter A2.

6.1.2 Mode 2—N.C.

When SW1 is on “ON” position,
On standby, coin receiving output NPN transistor is short circuit, max 100mA is available for electric current; on acceptance of enough coins (no less than machine charge amount), NPN transistor is turned on to open circuit for a period of 25ms/45ms/65ms/100ms (+/-20%).
Note: It can set the period of 25ms/45ms/65ms/100ms in coin acceptor parameter A2.

6.2 Coin Identification Security

When SW2 is on "OFF" position, it means the high security of coin acceptor identifies coins.
When SW2 is on "ON" position, it means the low security of coin acceptor identifies coins, acceptor can accept some defected coins.

6.3 Serial Output Signal Format

Note: This option is not suitable for parallel port output mode.

6.3.1 Pulse Signal

When SW3 in on "OFF "position, on acceptance of enough valid coins, Serial port sends out pulse signal.

6.3.1.1 Select mode 1-N.O.，In serial port output mode. (SW1 is on "OFF" position)

◎N.O. Pulse output oscillogram

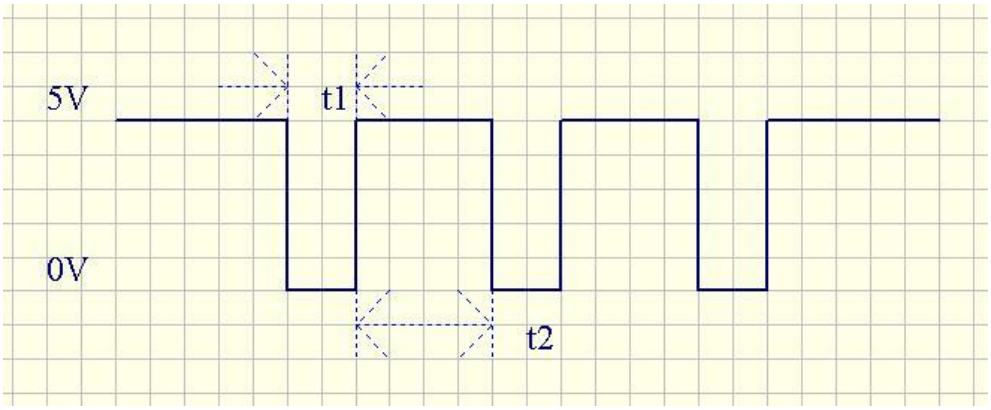

t1：Pulse duration of (25ms/45ms/65ms/100ms)

The duration is set in coin acceptor parameters A2.

t2：Pulse interval of 100ms

6.3.1.2 Select mode 2-N.C.， In serial port output mode. (SW1 is on "ON" position)

◎N.C. Pulse output oscillogram

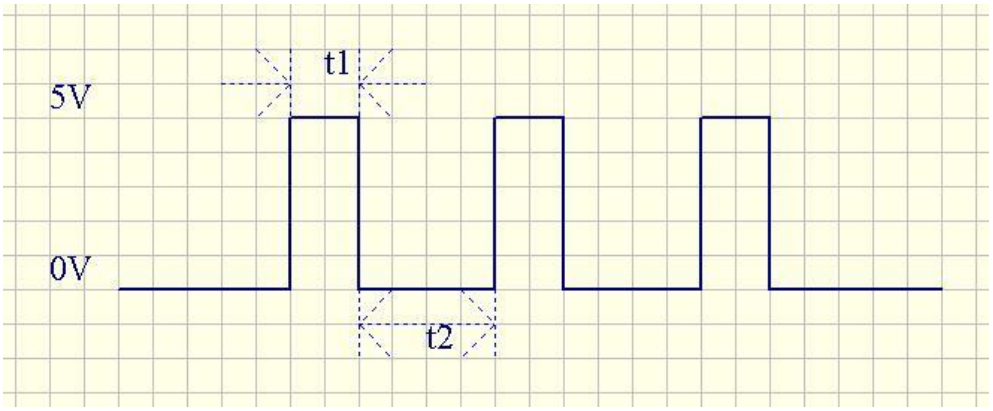

t1：Pulse duration of (25ms/45ms/65ms/100ms)

The duration is set in coin acceptor parameters A2.

t2：Pulse interval of 100ms

6.3.2 RS232 Signal

When SW3 in on "ON "position, on acceptance of enough valid coins, Serial port sends out RS232 signal.

6.3.2.1 Select mode 1-N.O.， In serial port output mode. (SW1 is on "OFF" position)

Note: Please select this mode when coin acceptor is connecting to machine's single port.

◎RS232 output oscillogram

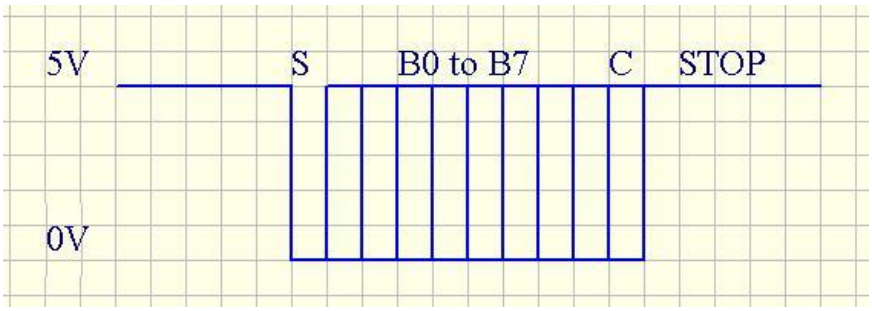

S：Start bit

B0 to B7：8 data bits

C：Even check

STOP：Stop bit

It can set the transmit rate（1200bps/2400bps/4800bps/9600bps）in coin acceptor parameter A2.

6.3.2.2 Select mode 2-N.C.， In serial port output mode. (SW1 is on "ON" position)

Note: Please select this mode when coin acceptor is connecting to PC's RS232 port.

◎RS232 output oscillogram

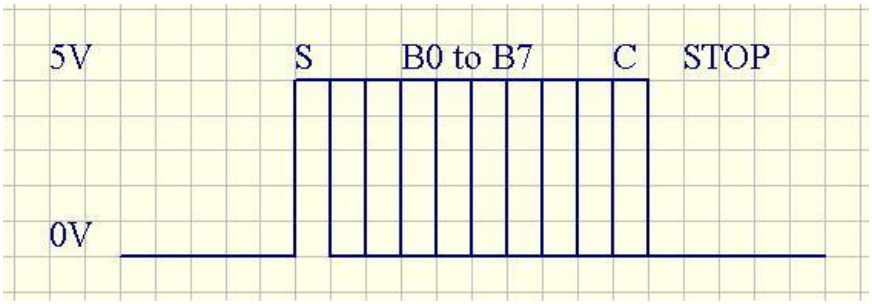

S：Start bit

B0 to B7：8 data bits

C：Even check

STOP：Stop bits

It can set the transmit rate（1200bps/2400bps/4800bps/9600bps）in coin acceptor parameter A2.

6.4 Inhibiting Port Output Level

6.4.1 Forbidden Mode 1--Low Level forbid accepting coins

When SW4 is on “OFF” position,

If Inhibiting port is disconnected or connected to a high level（>+3V）, coin acceptor will accept all coins.

If Inhibiting port is connected to a low level（<+1V），coin acceptor will refuse all coins.

6.4.2 Forbidden Mode 2--High Level forbid accepting coins

When SW4 is on “ON” position,

If Inhibiting port is disconnected or connected to a high level（>+3V）, coin acceptor will refuse all coins.

If Inhibiting port is connected to a low level（<+1V），coin acceptor will accept all coins.

7. Coin Parameters Setting

7.1 Access To Coin Parameters Setting

Keep pressing button A till CP is displayed.

LED displays CP , press button A to select one of six groups of coins.

→ CP → C1 → C2 → C3 → C4 → C5 → C6 →

7.2 Clean Up All Coin Parameters

When it displays CP , keep pressing button B till CC is displayed, it will clean up all six groups of coin parameters .

7.3 Clean Up Group Coin Parameters

When it displays CP , press button A to select one group of coins parameters needed among the six(C1~C6),

and then press button B to display coin values currently stored.

Keep pressing B key till 00 is displayed, then release, it means this group of coins parameters are cleaned up.

7.4 Reset All Coin Parameters

7.4.1 Clean up all existing coin parameters firstly

When it displays CP, keep pressing button B till CC is displayed, then release, it will clean up all six groups of coins parameters.

7.4.2 Set the first group of coins

Press button A to display C1, press button B to display the current coin value as 00,

press button B to adjust from 01 to A0 (A0=100).

→ 01 → 02 → …… → 98 → 99 → A0 →

Press button B to select the right coin value, and then deposit coins with same denomination but different year issued (it prompts "bi" each time deposit a coin),max 20 pieces coin for each group is available.

When there are 20 coins fully stored, it will prompt “bi.bi.bi”, and display F.

Press button A to next group setting, and display C2

7.4.3 Set the next group of coins

Please refer to steps 7.4.2 to set coins parameters of another 5 groups in C2~C6

7.5 Add New Coin Parameters

When it displays CP , press button A to select the needed coin group （C1~C6）, then press button B to displays the current coin value stored , deposit coins needed (it prompts "bi" each time deposit a coin), when it prompts “bi.bi.bi”and displays F ,it means this group is fully stored and don't need to add coins anymore.

7.6 Exit Coin Parameters Setting

After finish coins parameter setting, keep pressing button A for 2 seconds, release after it displays 88.

8. Coin Acceptor Parameters Setting

8.1 Acess To Coin Acceptor Parameters Setting

Keep pressing button B buton till AP is displayed, it enters into setting mode.
LED displays AP , press button A to select working parameters.

→ AP → A1 → A2 → A3 → A4 →

8.2 Recover Coin Acceptor Parameters To The Defaulted Value

Keep pressing B button when it displays AP , and release after "CC" is displayed, then all parameters is recover to the defaulted value.

Defaulted value:

A1 machine charge amount: 01

A2 serial output signal pulse-width/ RS232 transmit baud rate: 02 (45ms / 4800bps)

A3 faulty alarm option : 01 (rings only one time)

A4 serial port RS232 signal length: 01 (one byte)

A5 serial port output: 01

8.3 Machine Charge Amount Setting A1

When it displays A1, press button B to display existing charge credit stored in machine.
Press button B to adjust from 01 to A0(A0=100).

→ 01 → 02 → … → 98 → 99 → A0 →

Press button B to select the charge amount needed, press button A to next group working parameters A2.

Machine charging instructions:

E.g.: Set machine charge credit as 01, then serial port sends out one signal once when it receives one coin with credit 01, and sends five signals once when it receives one coin with credit 05.

E.g.: Set machine charge credit as 05, then serial port sends out one signal once when it receives five coins with credit 01, and sends two signals once when it receives one coin with credit 10.

E.g.: Set machine charge credit as 02, then serial port sent two signals once when it received one coin with credit 05 (05/02=02) , and there is remaining a coin credit, it will be cleaned up if there is no new coin coming within 60 seconds.

NOTE: Machine charge credit setting is not suitable for parallel port output mode.

8.4 Serial Output Signal Pulse-width/ RS232 Transmit Baud Rate Setting A2

When it displays A2, press button B to display existing parameters stored in machine.

→ 01 (25ms/9600bps) → 02 (45ms/4800bps) →
04 (100ms/1200bps) ← 03 (65ms/2400bps) ←

Press button B to adjust the needed parameter, and then press button A to next group of Coin Acceptor parameters A3.

8.5 Faulty Alarm Option A3

When it displays A3, press button B to display existing parameters stored in machine.

00 (Alarm doesn't ring) → 01 (Alarm rings one time) → 02 (Alarm keeps ringing) → 00

Press button B to adjust the needed parameter, press button A to next group of coin acceptor parameters A4.

8.6 Serial Port RS232 Signal Output Format A4 (can alter the format if needed)

When it displays A4, press button B to display existing parameters stored in machine.

01 (1 byte) → 02 (2 bytes) → 03 (3 bytes) → 01

01 (1 byte): Transmit coin parameters via one byte.

E.g.: Coin parameters date is 01, then date transmitted is 0x01.

02 (2 bytes): Transmit a title of 0xAA, and then follow with coin parameters data in one byte.

E.g.: coin parameters date is 01, then data transmitted is 0xAA + 0x01.

NOTE: Interval between two bytes transmitted is 1ms.

03 (3 bytes): Transmit a title of 0xAA, and then follow with coin parameters data in one byte, at last a verification value (XOR value for two former bytes)

E.g.: coin parameters date is 01, then data transmitted is 0xAA + 0x01+ 0xAB.

NOTE: Interval between two bytes transmitted is 1ms

Press button B to select coin acceptor parameters as needed, and press button A to next group of Coin Acceptor parameters A5.

8.7 Serial Or Parallel Port Option A5

When it displays A5, press button B to show existing parameters setting stored in machine

01 (serial port) → 02 (parallel port) → 01

01: On acceptance of enough coins, Serial port (5Pin) sends out signal but parallel port doesn't send.

02: On acceptance of enough coins, Parallel port (10Pin) sends out pulse signal but serial port doesn't send

Press button B to select coin acceptor parameters as needed, and press button A to back to AP .

8.8 Exit The Setting

After finished Coin Acceptor parameters setting, keep pressing button A for 2 seconds, release after 88 is displayed.

9. Common Faulties

9.1 Error Code(E1 - E7,EE)

Error code E1
It displays E1 after power on, it means that the first pair of sensor is out of order.
It displays E1 after deposit coin, it means that coin duration at the first pair of sensor is too long.

Error code E2
It displays E2 after power on, it means that the first pair of sensor is out of order.
It displays E2 after deposit coin, it means that coin duration at the second pair of sensor is too long.

Error code E3
It displays E3 after power on, it means that the first pair of sensor is out of order.
It displays E3 after deposit coin, it means that coin duration at the third pair of sensor is too long.

Error code E4
It displays E4 after power on, it means that the first pair of sensor is out of order.
It displays E4 after deposit coin, it means that coin duration at collection gate is too long.

Error code E5
It displays E5 after power on, it means that the first pair of induction coil is out of order.

Error code E6
It displays E6 after power on, it means that the second pair of induction coil is out of order.

Error code E7
It displays E7 after power on, it means that button A or B is stuck.

Error code EE
It displays EE after deposit coin, it means that there are coins not collected in coin box.

9.2 Coins Are Refused And Returned

- Inhibiting port output level mode is selected incorrect, please refer to **6.4** to check if switch SW4 is on the proper position; or check if the controlling electric level outputted from machine meets requirements or not.
- There isn't this coin parameters stored in coin acceptor, please refer to **7.5** to add new coin parameters.

9.3 Send No Signal After Deposit Coins

- Check if the machine charge amount setting is right or not, if coin value deposited falls short of the charge amount, Coin Acceptor would not send any signal. For instance, coin value deposited is 01, but machine charge amount is set as 02, then it would not send signal when only one coin is deposited, but send signals after deposit two coins. Please refer to **8.3** to check the machine charge amount settings.
- Check output port selection is right or not, please firstly confirm that connection ports of machine and coin acceptor are serial port or parallel port, and then check the selection according to **8.7**.

9.4 Send Error Signals After Deposit Coins

- When parallel port mode outputs error signal, please check if the settings of group （C1~C6） the coin belongs to are correct.
- When parallel port mode outputs error signal, please refer to **6.1** to check SW1 (serial port electric level option) is on right position or not.
- Please refer to **6.3** to check SW3 (serial port electric level option) is on right position or not.
- Please refer to **8.4** to check signal pulse-width and transmit baud rate is set right or not.

9.5 Coins Are Not Easy To Be Identified, Coins Are Returned Frequently

- Since coins issued year, outline, used duratin is different, coin parameters will be little differ from data stored in Coin Acceptor, please dial switch SW2 to ON position to loose coin identification security
- Plesae refer to **7.5**, add new coin parameters.